Protector® Series

GENERAC®

PROTECTOR® SERIES

Standby Generators

Liquid-Cooled Gaseous Engine

INCLUDES:

- Two-Line LCD Multilingual Digital Evolution™ Controller (English / Spanish / French / Portuguese) with external viewing window for easy indication of generator status and breaker position.
- Capability to be installed within 18 in (457mm) of a building*
- True Power™ Electrical Technology
- Isochronous Electronic Governor
- Sound Attenuated Enclosure
- Closed Coolant Recovery System
- Smart Battery Charger
- UV / Ozone Resistant Hoses
- ±1% Voltage Regulation
- Natural Gas or LP Operation
- 5 Year Limited Warranty
- UL 2200 Listed

Note: 25-45 kW units are field convertible between natural gas or liquid propane. 60 kW units are built per fuel requirement and are not convertible.

*Only if located away from doors, windows, fresh air intakes, and unless otherwise directed by local codes. Applicable for 25kW and 30 kW units only.

Standby Power Rating

Model RG025 (Aluminum - Bisque) - 25 kW 60 Hz
Model RG030 (Aluminum - Bisque) - 30 kW 60 Hz
Model RG036 (Aluminum - Bisque) - 36 kW 60 Hz
Model RG045 (Aluminum - Bisque) - 45 kW 60 Hz
Model RG060 (Aluminum - Bisque) - 60 kW 60 Hz

Mobile Link

C ETL US LISTED

USA ENGINEERED & BUILT*
*Assembled in the USA using domestic and foreign parts

QUIET TEST™

Meets EPA Emission Regulations
25, 30 & 45 kW meet CA/MA emissions compliant
36 & 60 kW not for sale in CA / MA

FEATURES

- **INNOVATIVE DESIGN & PROTOTYPE TESTING** are key components of GENERAC'S success in "IMPROVING POWER BY DESIGN." But it doesn't stop there. Total commitment to component testing, reliability testing, environmental testing, destruction and life testing, plus testing to applicable CSA, NEMA, EGSA, and other standards, allows you to choose GENERAC POWER SYSTEMS with the confidence that these systems will provide superior performance.
- **TEST CRITERIA:**
  - ✓ **PROTOTYPE TESTED**
  - ✓ **NEMA MG1-22 EVALUATION**
  - ✓ **SYSTEM TORSIONAL TESTED**
  - ✓ **MOTOR STARTING ABILITY**
- **MOBILE LINK® CONNECTIVITY:** FREE with all RG generators, Mobile Link Wi-Fi allows users to monitor generator status from anywhere in the world using a smartphone, tablet, or PC. Easily access information such as the current operating status and maintenance alerts. Users can connect an account to an authorized service dealer for fast, friendly, and proactive service. With Mobile Link, users are taken care of before the next power outage.
- **SOLID-STATE, FREQUENCY COMPENSATED VOLTAGE REGULATION.** This state-of-the-art power maximizing regulation system is standard on all Generac models. It provides optimized FAST RESPONSE to changing load conditions and MAXIMUM MOTOR STARTING CAPABILITY by electronically torque-matching the surge loads to the engine. Digital voltage regulation at ±1%.
- **SINGLE SOURCE SERVICE RESPONSE** from Generac's extensive dealer network provides parts and service know-how for the entire unit, from the engine to the smallest electronic component.
- **GENERAC TRANSFER SWITCHES.** Long life and reliability are synonymous with GENERAC POWER SYSTEMS. One reason for this confidence is the GENERAC product line is offered with its own transfer systems and controls for total system compatibility.

GENERAC®

ISO 9001:2008

GENERAC®

25 • 30 • 36 • 45 • 60 kW

application & engineering data

GENERATOR SPECIFICATIONS

Type	Synchronous
Rotor Insulation Class	H
Stator Insulation Class	H
Telephone Interference Factor (TIF)	<50
Alternator Output Leads 1-Phase	4 wire
Alternator Output Leads 3-Phase	6 wire
Bearings	Sealed Ball
Coupling	Flexible Disc
Excitation System	Direct

VOLTAGE REGULATION

Type	Electronic
Sensing	Single Phase
Regulation	± 1%

GOVERNOR SPECIFICATIONS

Type	Electronic
Frequency Regulation	Isochronous
Steady State Regulation	± 0.25%

ELECTRICAL SYSTEM

Battery Charge Alternator	12 Volt 15 Amp – 25 & 30 kW 12 Volt 30 Amp – 36, 45, & 60 kW
Static Battery Charger	2 Amp
Recommended Battery (battery not included)	Group 26F, 525 CCA
System Voltage	12 Volts

GENERATOR FEATURES

Revolving field heavy duty generator
Directly connected to the engine
Operating temperature rise 120 °C above a 40 °C ambient
Class H insulation is NEMA rated
All models fully prototyped tested

ENCLOSURE FEATURES

Aluminum weather protective enclosure	Ensures protection against mother nature. Electrostatically applied textured epoxy paint for added durability.
Enclosed critical grade muffler	Quiet, critical grade muffler is mounted inside the unit to prevent injuries.
Small, compact, attractive	Makes for an easy, eye appealing installation.
SAE	Sound attenuated enclosure ensures quiet operation.

ENGINE SPECIFICATIONS: 25 & 30 kW

Make	Generac
Model	In-line
Cylinders	4
Displacement (Liters)	1.5
Bore (in / mm)	3.05 / 77.4
Stroke (in / mm)	3.13 / 79.5
Compression Ratio	11:1
Intake Air System	Naturally Aspirated
Lifter Type	Hydraulic

ENGINE SPECIFICATIONS: 36, 45, & 60 kW

Make	Generac
Model	In-line
Cylinders	4
Displacement (Liters)	2.4
Bore (in / mm)	3.41 / 86.5
Stroke (in / mm)	3.94 / 100
Compression Ratio	9.5:1
Intake Air System	Naturally Aspirated (36 & 45 kW) or Turbocharged / Aftercooled (60 kW)
Lifter Type	Hydraulic

ENGINE LUBRICATION SYSTEM

Oil Pump Type	Gear
Oil Filter Type	Full flow spin-on cartridge
Crankcase Capacity (qt/l)	4 / 3.8 - 25, 30, 36, & 45 kW 5.25 / 4.96 – 60 kW

ENGINE COOLING SYSTEM

Type	Closed
Water Pump	Belt driven
Fan Speed (rpm)	2,484 – 25 & 30 kW 1,865 – 36 &45 kW 2,100 – 60 kW
Fan Diameter (in / mm)	17.7 / 449.6 (25 & 30 kW) 22 / 558.8 (36, 45, & 60 kW)
Fan Mode	Pusher (25 & 30 kW) Puller (36, 45, & 60 kW)

FUEL SYSTEM

Fuel Type	Natural gas, propane vapor
Carburetor	Down Draft
Secondary Fuel Regulator	Standard
Fuel Shut Off Solenoid	Standard
LP Fuel Pressure	5 – 14 in Water Column / 9 – 26 mm HG
NG Fuel Pressure	5 – 14 in Water Column / 9 – 26 mm HG

(All ratings in accordance with BS5514, ISO3046, ISO8528, SAE J1349 and DIN6271)

25 • 30 • 36 • 45 • 60 kW

operating data

GENERATOR OUTPUT VOLTAGE/kW - 60 Hz

		kW LPG	Amp LPG	kW Nat. Gas	Amp Nat. Gas	CB Size (Both)
RG025	120 / 240 V, 1Ø, 1.0 pf	25	104	25	104	125
	120 / 208 V, 3Ø, 0.8 pf	25	87	25	87	100
	120 / 240 V, 3Ø, 0.8 pf	25	75	25	75	90
RG030	120 / 240 V, 1Ø, 1.0 pf	30	125	30	125	150
	120 / 208 V, 3Ø, 0.8 pf	30	104	30	104	125
	120 / 240 V, 3Ø, 0.8 pf	30	90	30	90	100
RG036	120 / 240 V, 1Ø, 1.0 pf	36	150	36	150	175
	120 / 208 V, 3Ø, 0.8 pf	36	125	36	125	150
	120 / 240 V, 3Ø, 0.8 pf	36	108	36	108	125
	277 / 480 V, 3Ø, 0.8 pf	36	54	36	54	60
RG045	120 / 240 V, 1Ø, 1.0 pf	45	188	45	188	200
	120 / 208 V, 3Ø, 0.8 pf	45	156	45	156	175
	120 / 240 V, 3Ø, 0.8 pf	45	135	45	135	150
	277 / 480 V, 3Ø, 0.8 pf	45	68	45	68	80
RG060	120 / 240 V, 1Ø, 1.0 pf	60	250	60	250	300
	120 / 208 V, 3Ø, 0.8 pf	60	208	60	208	250
	120 / 240 V, 3Ø, 0.8 pf	60	180	60	180	200
	277 / 480 V, 3Ø, 0.8 pf	60	90	60	90	100

SURGE CAPACITY IN AMPS

		Voltage Dip @ < .4 pf	
		15%	30%
RG025	120/240 V, 1Ø	65	170
	120/208 V, 3Ø	80	130
	120/240 V, 3Ø	69	112
RG030	120/240 V, 1Ø	75	180
	120/208 V, 3Ø	96	155
	120/240 V, 3Ø	83	134
RG036	120/240 V, 1Ø	105	240
	120/208 V, 3Ø	44	130
	120/240 V, 3Ø	38	115
	277/480 V, 3Ø	20	60
RG045	120/240 V, 1Ø	105	240
	120/208 V, 3Ø	44	130
	120/240 V, 3Ø	38	115
	277/480 V, 3Ø	20	60
RG060	120/240 V, 1Ø	140	320
	120/208 V, 3Ø	70	210
	120/240 V, 3Ø	61	182
	277/480 V, 3Ø	30	91

Note: **Fuel pipe must be sized for full load.**

For Btu content, multiply ft^3/hr x 2,520 (LP) or ft^3/hr x 1,000 (NG)

For megajoule content, multiply m^3/hr x 93.15 (LP) or m^3/hr x 37.26 (NG)

Refer to "Emissions Data Sheets" for maximum fuel flow for EPA and SCAQMD permitting purposes.

ENGINE FUEL CONSUMPTION

		Natural Gas		Propane		
		(ft^3/hr)	(m^3/hr)	(gal/hr)	(l/hr)	(ft^3/hr)
RG026	Exercise cycle	60	1.7	0.7	2.5	24
	25% of rated load	220	6.3	2.9	9.1	88
	50% of rated load	297	8.4	3.3	12.3	119
	75% of rated load	362	10.3	4	15	145
	100% of rated load	430	12.2	4.7	17.8	172
RG030	Exercise cycle	60	1.7	0.7	2.5	24
	25% of rated load	240	6.8	2.6	10	96
	50% of rated load	320	9.1	3.5	13.3	128
	75% of rated load	400	11.4	4.4	16.6	160
	100% of rated load	492	14	5.4	20.4	197
RG036	Exercise cycle	65	1.8	0.7	2.6	25
	25% of rated load	210	6	2.3	8.6	83
	50% of rated load	380	10.8	4.2	15.7	151
	75% of rated load	545	15.5	5.9	22.4	216
	100% of rated load	730	20.7	8	30.1	290
RG045	Exercise cycle	65	1.8	0.7	2.6	25
	25% of rated load	210	6	2.3	8.6	83
	50% of rated load	380	10.8	4.2	15.7	151
	75% of rated load	545	15.5	5.9	22.4	216
	100% of rated load	730	20.7	8	30.1	290
RG060	Exercise cycle	123	3.5	1.34	5.1	49.3
	25% of rated load	267	7.6	2.7	10.5	101
	50% of rated load	483	13.7	5	19	183
	75% of rated load	672	19.1	7	26.5	255
	100% of rated load	862	24.5	9	33.9	327

STANDBY RATING: Standby ratings apply to installations served by a reliable utility source. The standby rating is applicable to varying loads for the duration of a power outage. There is no overload capability for this rating. Ratings are in accordance with ISO-3046-1. Design and specifications are subject to change without notice.

GENERAC®

25 • 30 • 36 • 45 • 60 kW operating data

ENGINE COOLING

	25 kW	30 kW	36 kW	45 kW	60 kW
Air flow (inlet air including alternator and combustion air in cfm/cmm)	2,490 / 70.5	2,490 / 70.5	2,725 / 77.2	2,725 / 77.2	3,280 / 92.9
System coolant capacity (gal / liters)	2 / 7.6	2 / 7.6	2.5 / 9.5	2.5 / 9.5	2.5 / 9.5
Heat rejection to coolant (BTU per hr/MJ per hr)	112,000 / 118.2	135,000 / 142.4	193,000 / 203.6	193,000 / 203.6	270,000 / 284.9
Maximum operation air temperature on radiator (°F / °C)	140 / 60				
Maximum ambient temperature (°F / °C)	122 / 50				

COMBUSTION REQUIREMENTS

Flow at rated power (cfm / cmm)	62 / 1.8	72 / 2	144 / 4.1	144 / 4.1	180 / 5.1

SOUND EMISSIONS

Sound output in dB(A) at 23 ft (7 m) with generator in exercise mode*	59	59	61	61	65
Sound output in dB(A) at 23 ft (7 m) with generator operating at normal load*	72	73	73	73	72

*Sound levels are taken from the front of the generator. Sound levels taken from other sides of the generator may be higher depending on installation parameters.

EXHAUST

Exhaust flow at rated output (cfm / cmm)	203 / 5.7	237 / 6.7	300 / 8.5	420 / 11.9	494 / 14
Exhaust temperature at muffler outlet (°F / °C)	1,100 / 593	1,130 / 610	1,075 / 579	1,100 / 593	1,050 / 566

ENGINE PARAMETERS

Rated Synchronous rpm	3,600

POWER ADJUSTMENT FOR AMBIENT CONDITIONS

Temperature Deration ..... 3% for every 10 °C above 25 °C or 1.65% for every 10 °F above 77 °F
Altitude Deration (25, 30, 36, & 45 kW) ..... 1% for every 100 m above 183 m or 3% for every 1,000 ft above 600 ft
Altitude Deration (60 kW) ..... 1% for every 100 m above 915 m or 3% for every 1,000 ft above 3,000 ft

CONTROLLER FEATURES

Two-Line Plain Text LCD Display ..... Simple user interface for ease of operation.
Mode Switch: Auto ..... Automatic Start on Utility failure. 7 day exerciser.
Off ..... Stops unit. Power is removed. Control and charger still operate.
Manual ..... Start with starter control, unit stays on. If utility fails, transfer to load takes place.
Programmable start delay between 10 – 30 seconds ..... Standard 10 sec
Engine Start Sequence ..... Cyclic cranking: 16 sec on, 7 rest (90 sec maximum duration)
Engine Warm-up ..... 5 sec
Engine Cool-Down ..... 1 min
Starter Lock-out. ..... Starter cannot re-engage until 5 sec after engine has stopped.
Smart Battery Charger ..... Standard
Automatic Voltage Regulation with Over and Under Voltage Protection ..... Standard
Automatic Low Oil Pressure Shutdown ..... Standard
Overspeed Shutdown ..... Standard, 72 Hz
High Temperature Shutdown ..... Standard
Overcrank Protection ..... Standard
Safety Fused ..... Standard
Failure to Transfer Protection ..... Standard
Low Battery Protection ..... Standard
50 Event Run Log ..... Standard
Future Set Capable Exerciser ..... Standard
Incorrect Wiring Protection ..... Standard
Internal Fault Protection ..... Standard
Common External Fault Capability ..... Standard
Governor Failure Protection ..... Standard

REMOTE MONITORING

●	Ability to view generator status	Monitor generator with a smartphone, tablet, or computer at any time via the Mobile Link application for complete peace of mind.
●	Ability to view generator Exercise / Run and Total Hours	Review the generator's complete protection profile for exercise hours and total hours.
●	Ability to view generator maintenance information	Provides maintenance information for the specific model generator when scheduled maintenance is due.
●	Monthly report with previous month's activity	Detailed monthly reports provide historical generator information.
●	Ability to view generator battery information	Built in battery diagnostics displaying current state of the battery.
●	Weather information	Provides detailed local ambient weather conditions for generator location.

25 • 30 • 36 •45 • 60 kW

available accessories

Model #	Product	Description
G0071690	Mobile Link® 4G LTE Cellular Accessory	Generac's Mobile Link allows you to check the status of your generator from anywhere that you have access to an Internet connection from a PC or with any smart device. You will even be notified when a change in the generator's status occurs via e-mail or text message. Note: Harness Adapter Kit required. Available in the U.S. only.
G006175-0 - 25 & 30 kW G005630-1 - 36, 45, & 60 kW	Cold Weather Kit	If the temperature regularly falls below 32 °F (0 °C), install a cold weather kit to maintain optimal battery temperature. Kit consists of battery warmer with thermostat built into the wrap.
G006174-0 - 25 & 30 kW G005616-0 - 36, 45, & 60 kW	Extreme Cold Weather Kit	Recommended where the temperature regularly falls below 32 °F (0 °C) for extended periods of time. For liquid cooled units only.
G005651-0	Base Plug Kit	Add base plugs to the base of the generator to keep out debris.
G005703-0 - Bisque	Paint Kit	If the generator enclosure is scratched or damaged, it is important to touch-up the paint to protect from future corrosion. The paint kit includes the necessary paint to properly maintain or touch-up a generator enclosure.
G006176-0 - 25 & 30 kW G006172-0 - 36 & 45 kW G006171-0 - 60 kW	Scheduled Maintenance Kit	The Liquid-Cooled Scheduled Maintenance Kits offer all the hardware necessary to perform complete maintenance on Generac liquid-cooled generators.
G007000-0 (50 Amps) G007006-0 (100 Amps)	Smart Management Module	Smart Management Modules (SMM) optimize the performance of a standby generator. They manage large electrical loads upon startup and load shed to aid in recovery when overloaded. In many cases, SMMs can reduce the overall size and cost of the system.
G006510-0	E-Stop resettable switch for commercial installs to NEC2020	E-stop allows for immediate fuel shutoff and generator shutdown in the event of an emergency.
G007005-0	Wi-Fi LP Fuel Level Monitor	The Wi-Fi enabled LP fuel level monitor provides constant monitoring of the connected LP fuel tank. Monitoring the LP tank's fuel level is an important step in making sure your generator is ready to run during an unexpected power failure. Status alerts are available through a free application to notify when your LP tank is in need of a refill.
A0000018981	Ultrasonic Cleaner Solution	An ultra-concentrated anti-corrosive cleaning solution engineered to reach the smallest cavities to clean the toughest contaminants. This water based formula is non-toxic, biodegradable, and safe for both metal and plastic surfaces and is superior in rinsability.
A0000019001	All Surface Protectant	All Surface Protectant for vinyl, rubber, and plastics creates a barrier that seals & protects surfaces from water and UV rays while renewing the look of the surface.

25 & 30 kW

Drawing #0K8420-B (1 of 2)

installation layout

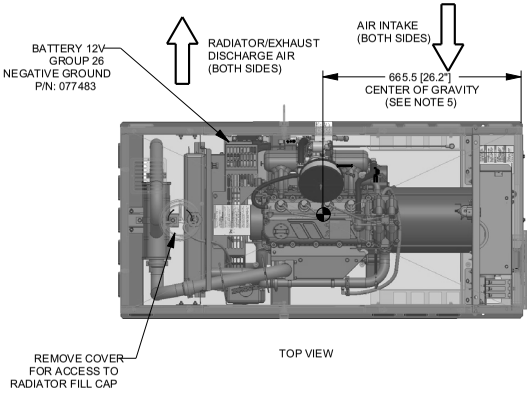

TOP VIEW

SERVICE ITEM	1.5L
OIL FILL CAP	EITHER DOOR
OIL DIP STICK	RIGHT DOOR
OIL FILTER	RIGHT DOOR
OIL DRAIN HOSE	RIGHT DOOR
RADIATOR DRAIN HOSE	RIGHT DOOR
AIR CLEANER ELEMENT	RIGHT DOOR
SPARK PLUGS	RIGHT DOOR
MUFFLER	SEE NOTE 12
FAN BELT	EITHER DOOR
BATTERY	RIGHT DOOR

REFERENCE OWNERS MANUAL
FOR PERIODIC
REPLACEMENT PART LISTINGS.

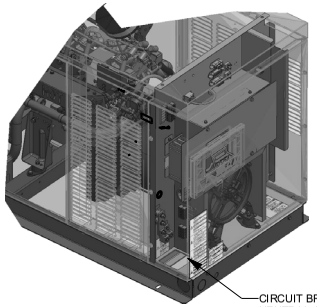

NOTES:

1. MINIMUM RECOMMENDED CONCRETE PAD SIZE: 1092 (43") WIDE X 1887 (74.3") LONG. REFERENCE INSTALLATION GUIDE SUPPLIED WITH UNIT FOR CONCRETE PAD GUIDELINES.
2. ALLOW SUFFICIENT ROOM ON ALL SIDES OF THE GENERATOR FOR MAINTENANCE AND SERVICING. THIS UNIT MUST BE INSTALLED IN ACCORDANCE WITH CURRENT APPLICABLE NFPA 37 AND NFPA 70 STANDARDS AS WELL AS ANY OTHER FEDERAL, STATE, AND LOCAL CODES.
3. CONTROL PANEL / CIRCUIT BREAKER INFORMATION:
   - SEE SPECIFICATION SHEET OR OWNERS MANUAL
   - ACCESSIBLE THROUGH CUSTOMER ACCESS ASSEMBLY DOOR ON REAR OF GENERATOR.
4. REMOVE THE REAR ENCLOSURE COVER PANEL TO ACCESS THE STUB-UP AREAS AS FOLLOWS:
   - HIGH VOLTAGE CONNECTION INCLUDING AC LOAD LEAD CONDUIT CONNECTION NEUTRAL CONNECTION, BATTERY CHARGER 120 VOLT AC (0.5 AMP MAX) CONNECTION.
   - LOW VOLTAGE CONNECTION INCLUDING TRANSFER SWITCH CONTROL WIRES.
5. CENTER OF GRAVITY AND WEIGHT MAY CHANGE DUE TO UNIT OPTIONS.
6. BOTTOM OF GENERATOR SET MUST BE ENCLOSED TO PREVENT PEST INTRUSION AND RECIRCULATION OF DISCHARGE AIR AND/OR IMPROPER COOLING AIR FLOW.
7. EXHAUST SYSTEM MAXIMUM BACK PRESSURE: 24 INCHES H2O.
8. REFERENCE OWNERS MANUAL FOR LIFTING WARNINGS.
9. MOUNTING BOLTS OR STUDS TO MOUNTING SURFACE SHALL BE 5/8-11 GRADE 5 (USE STANDARD SAE TORQUE SPECS)
10. MUST ALLOW FREE FLOW OF INTAKE AIR, DISCHARGE AIR AND EXHAUST. SEE SPEC SHEET FOR MINIMUM AIR FLOW AND MAXIMUM RESTRICTION REQUIREMENTS.
11. GENERATOR MUST BE INSTALLED SUCH THAT FRESH COOLING AIR IS AVAILABLE AND THAT DISCHARGE AIR FROM RADIATOR IS NOT RECIRCULATED.
12. EXHAUST MUFFLER ENCLOSED WITHIN GENERATOR ENCLOSURE, REMOVE ENCLOSURE TO ACCESS EXHAUST MUFFLER.

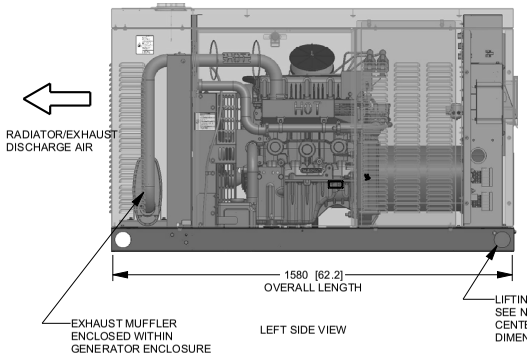

LEFT SIDE VIEW

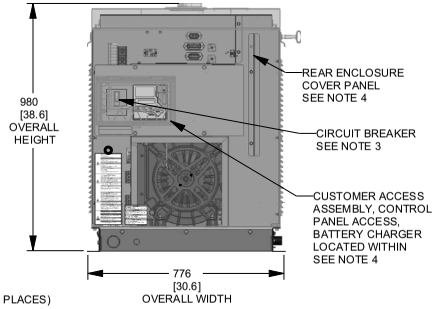

REAR VIEW

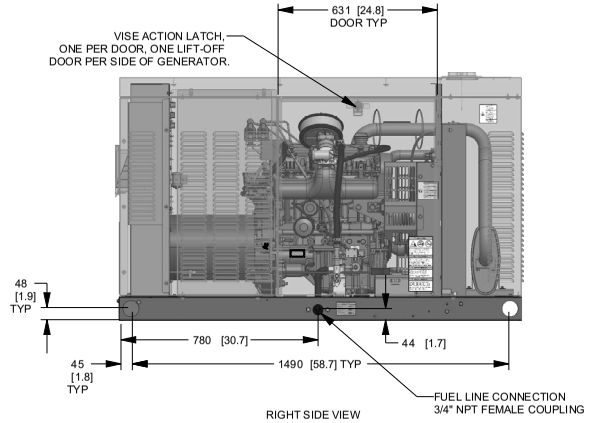

RIGHT SIDE VIEW

WEIGHT DATA				
ENGINE/KW	ENCLOSURE MATERIAL	WEIGHT GENSET ONLY KG [LBS]	WEIGHT SHIPPING SKID KG [LBS]	SHIPPING WEIGHT KG [LBS]
1.5L/25KW	ST	392 [865]	30 [66]	422 [931]
1.5L/30KW	ST	406 [895]	30 [66]	436 [961]
1.5L/25KW	AL	352 [777]	30 [66]	382 [843]
1.5L/30KW	AL	366 [807]	30 [66]	396 [873]

25 & 30 kW

installation layout

Drawing #0K8420-B (2 of 2)

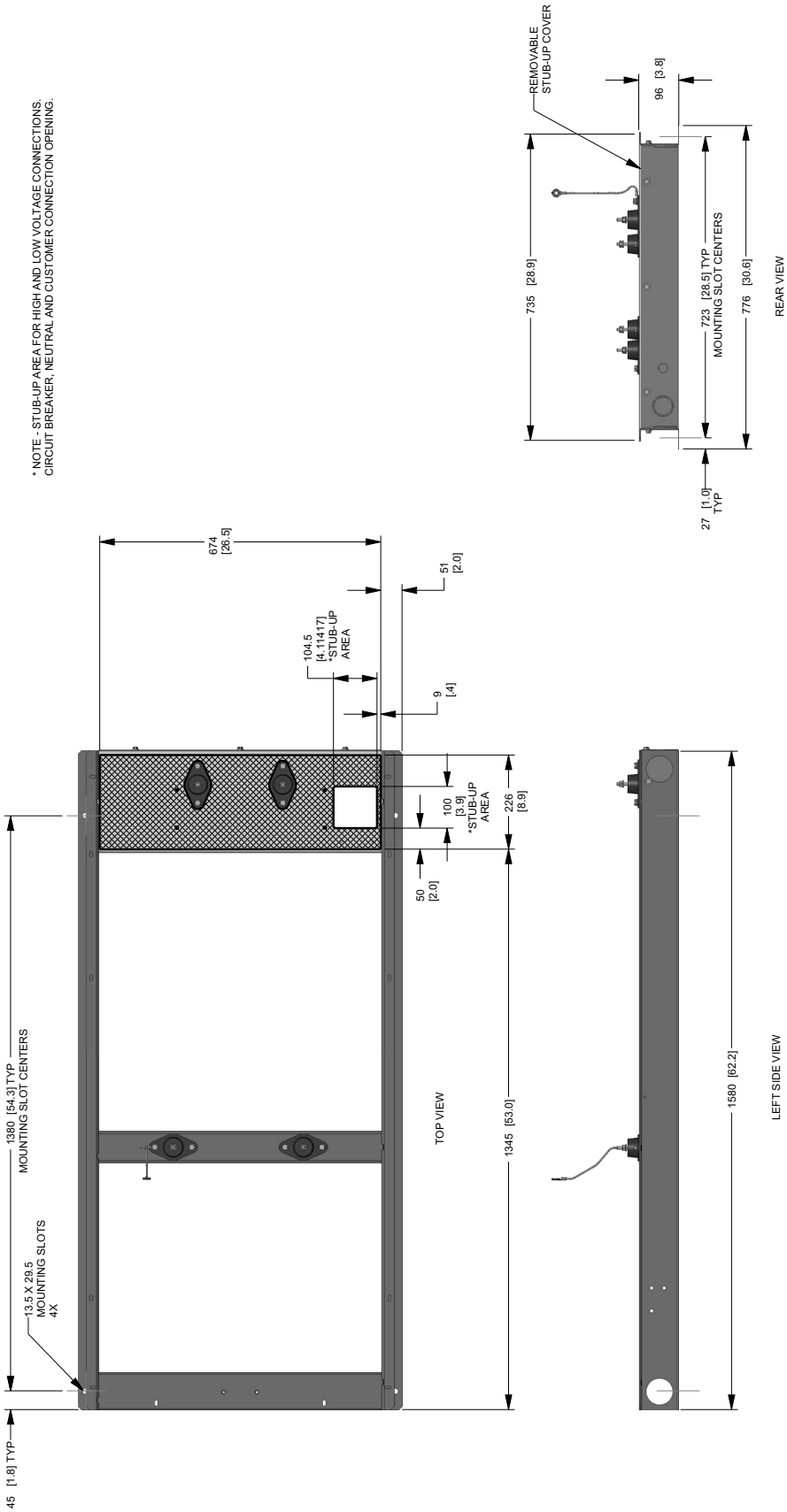

36 & 45 kW

Drawing #0K8636-B (1 of 2)

installation layout

GENERAC®

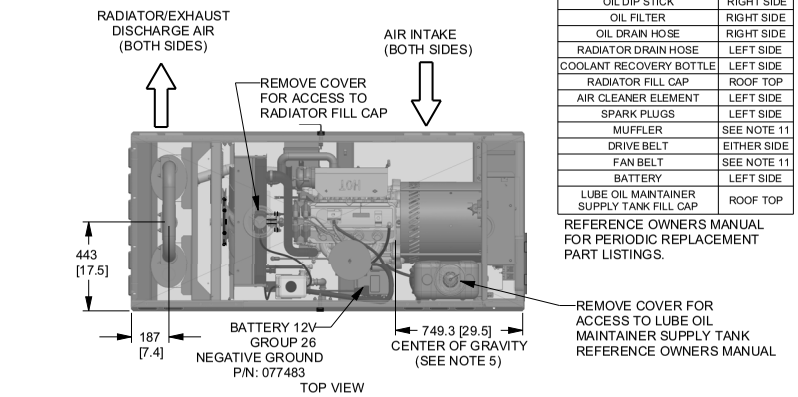

SERVICE ITEM	2.4L
OIL FILL CAP	EITHER SIDE
OIL DIP STICK	RIGHT SIDE
OIL FILTER	RIGHT SIDE
OIL DRAIN HOSE	RIGHT SIDE
RADIATOR DRAIN HOSE	LEFT SIDE
COOLANT RECOVERY BOTTLE	LEFT SIDE
RADIATOR FILL CAP	ROOF TOP
AIR CLEANER ELEMENT	LEFT SIDE
SPARK PLUGS	LEFT SIDE
MUFFLER	SEE NOTE 11
DRIVE BELT	EITHER SIDE
FAN BELT	SEE NOTE 11
BATTERY	LEFT SIDE
LUBE OIL MAINTAINER SUPPLY TANK FILL CAP	ROOF TOP

REFERENCE OWNERS MANUAL FOR PERIODIC REPLACEMENT PART LISTINGS.

NOTES:

1. MINIMUM RECOMMENDED CONCRETE PAD SIZE: 1194MM (47") WIDE X 2256MM (88.8") LONG. REFERENCE INSTALLATION GUIDE SUPPLIED WITH UNIT FOR CONCRETE PAD GUIDELINES.
2. ALLOW SUFFICIENT ROOM ON ALL SIDES OF THE GENERATOR FOR MAINTENANCE AND SERVICING. THIS UNIT MUST BE INSTALLED IN ACCORDANCE WITH CURRENT APPLICABLE NFPA 37 AND NFPA 70 STANDARDS AS WELL AS ANY OTHER FEDERAL, STATE, AND LOCAL CODES.
3. CONTROL PANEL / CIRCUIT BREAKER INFORMATION:
   - SEE SPECIFICATION SHEET OR OWNERS MANUAL
   - ACCESSIBLE THROUGH CUSTOMER ACCESS ASSEMBLY DOOR ON REAR OF GENERATOR.
4. REMOVE THE REAR ENCLOSURE COVER PANEL TO ACCESS THE STUB-UP AREAS AS FOLLOWS:
   - HIGH VOLTAGE CONNECTION INCLUDING AC LOAD LEAD CONDUIT CONNECTION NEUTRAL CONNECTION, BATTERY CHARGER 120 VOLT AC (0.5 AMP MAX) CONNECTION.
   - LOW VOLTAGE CONNECTION INCLUDING TRANSFER SWITCH CONTROL WIRES.
5. CENTER OF GRAVITY AND WEIGHT MAY CHANGE DUE TO UNIT OPTIONS.
6. BOTTOM OF GENERATOR SET MUST BE ENCLOSED TO PREVENT PEST INTRUSION AND RECIRCULATION OF DISCHARGE AIR AND/OR IMPROPER COOLING AIR FLOW.
7. REFERENCE OWNERS MANUAL FOR LIFTING WARNINGS.
8. MOUNTING BOLTS OR STUDS TO MOUNTING SURFACE SHALL BE 5/8-11 GRADE 5 (USE STANDARD SAE TORQUE SPECS)
9. MUST ALLOW FREE FLOW OF INTAKE AIR, DISCHARGE AIR AND EXHAUST. SEE SPEC SHEET FOR MINIMUM AIR FLOW AND MAXIMUM RESTRICTION REQUIREMENTS.
10. GENERATOR MUST BE INSTALLED SUCH THAT FRESH COOLING AIR IS AVAILABLE AND THAT DISCHARGE AIR FROM RADIATOR IS NOT RECIRCULATED.
11. EXHAUST MUFFLER AND FAN BELT ENCLOSED WITHIN GENERATOR ENCLOSURE, REMOVE FRONT PANEL TO ACCESS.

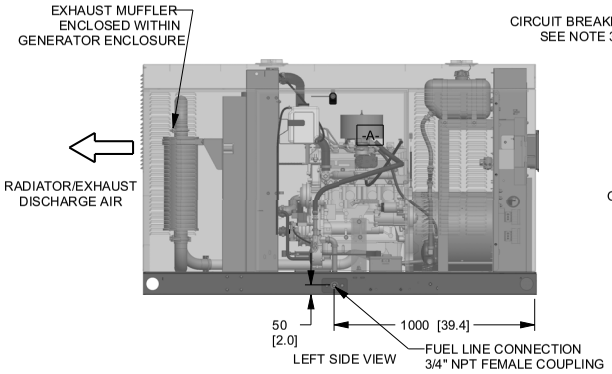

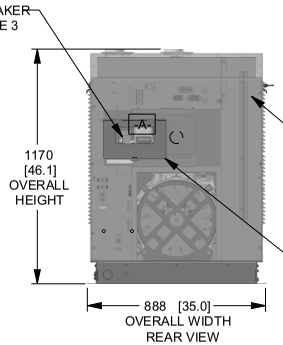

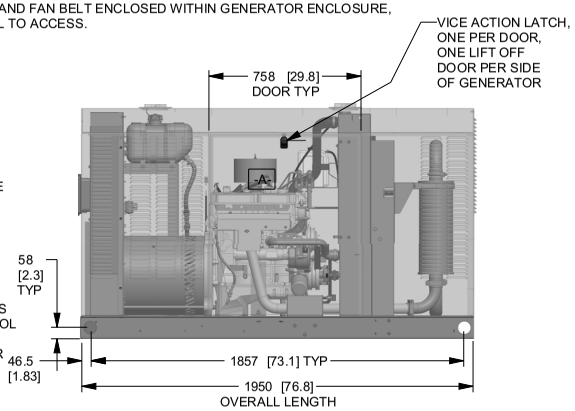

WEIGHT DATA				
ENGINE/KW	ENCLOSURE MATERIAL	WEIGHT GENSET ONLY KG [LBS]	WEIGHT SHIPPING SKID KG [LBS]	SHIPPING WEIGHT KG [LBS]
2.4L 36KW	ST	569 [1255]	44 [98]	613 [1353]
2.4L 36KW	AL	545 [1202]	44 [98]	590 [1300]
2.4L 45KW	ST	596 [1313]	44 [98]	640 [1411]
2.4L 45KW	AL	572 [1260]	44 [98]	616 [1358]

DIMENSIONS: MM [INCH]

36 & 45 kW

installation layout

Drawing #0K8636-B (2 of 2)

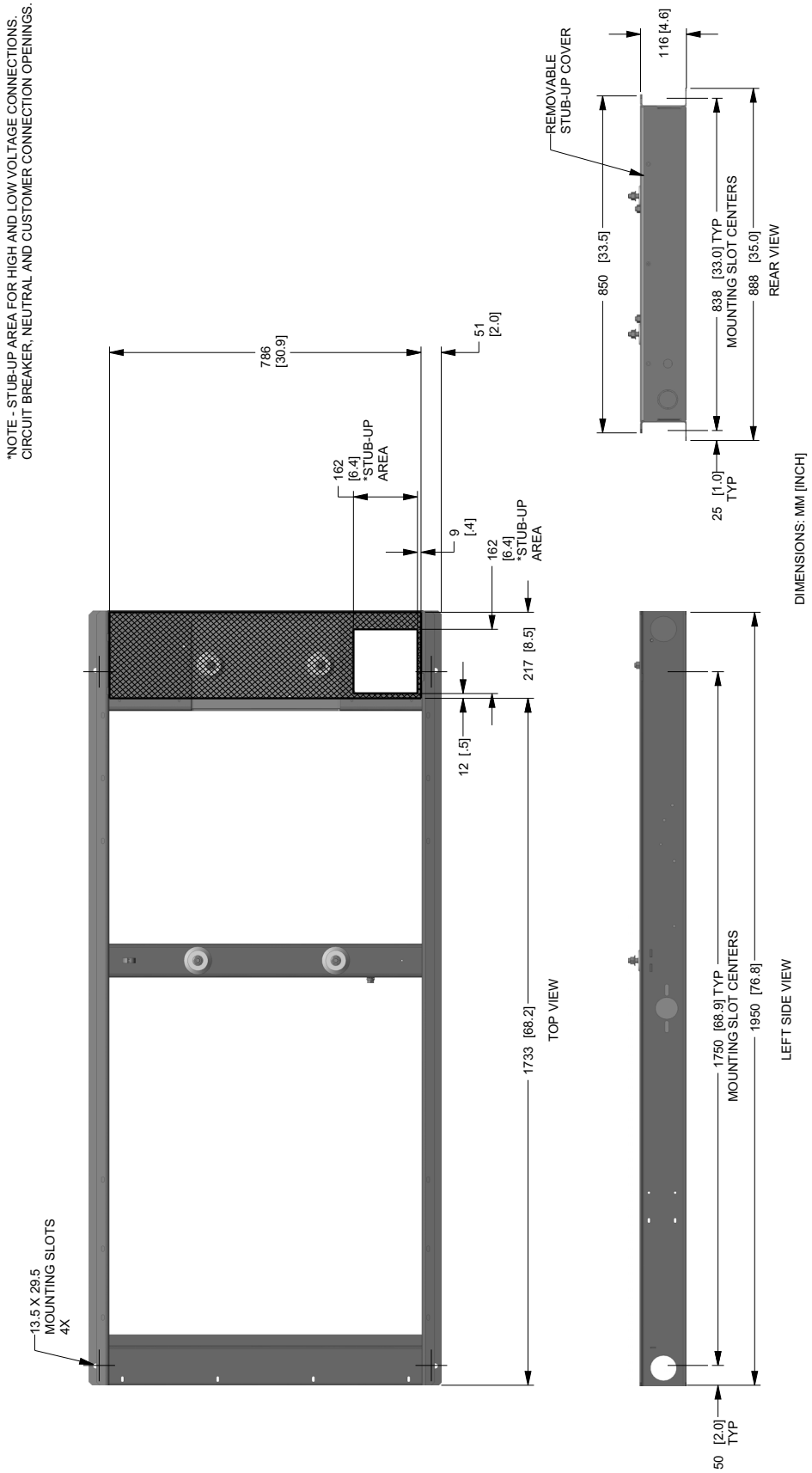

60 kW

Drawing #00L2090-B (1 of 2)

installation layout

GENERAC®

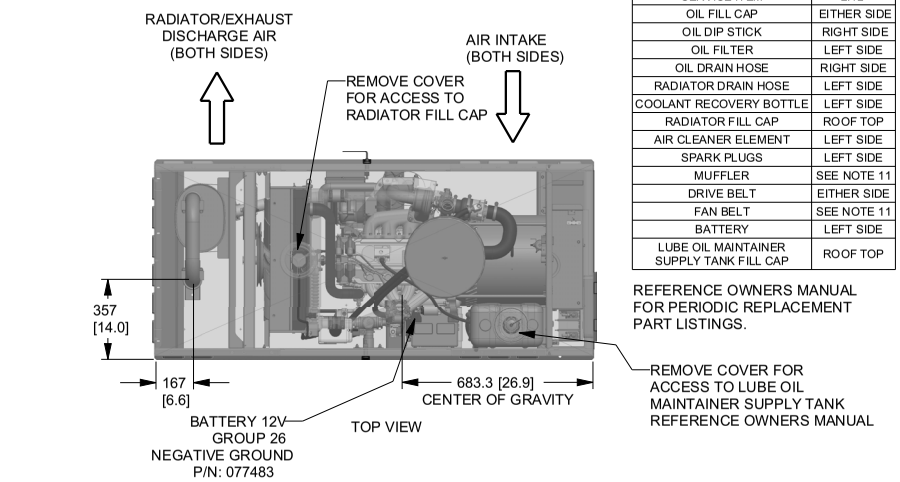

SERVICE ITEM	2.4L
OIL FILL CAP	EITHER SIDE
OIL DIP STICK	RIGHT SIDE
OIL FILTER	LEFT SIDE
OIL DRAIN HOSE	RIGHT SIDE
RADIATOR DRAIN HOSE	LEFT SIDE
COOLANT RECOVERY BOTTLE	LEFT SIDE
RADIATOR FILL CAP	ROOF TOP
AIR CLEANER ELEMENT	LEFT SIDE
SPARK PLUGS	LEFT SIDE
MUFFLER	SEE NOTE 11
DRIVE BELT	EITHER SIDE
FAN BELT	SEE NOTE 11
BATTERY	LEFT SIDE
LUBE OIL MAINTAINER SUPPLY TANK FILL CAP	ROOF TOP

REFERENCE OWNERS MANUAL FOR PERIODIC REPLACEMENT PART LISTINGS.

NOTES:

1. MINIMUM RECOMMENDED CONCRETE PAD SIZE: 1194MM (47") WIDE X 2256MM (88.8") LONG. REFERENCE INSTALLATION GUIDE SUPPLIED WITH UNIT FOR CONCRETE PAD GUIDELINES.
2. ALLOW SUFFICIENT ROOM ON ALL SIDES OF THE GENERATOR FOR MAINTENANCE AND SERVICING. THIS UNIT MUST BE INSTALLED IN ACCORDANCE WITH CURRENT APPLICABLE NFPA 37 AND NFPA 70 STANDARDS AS WELL AS ANY OTHER FEDERAL, STATE, AND LOCAL CODES.
3. CONTROL PANEL / CIRCUIT BREAKER INFORMATION:
   - SEE SPECIFICATION SHEET OR OWNERS MANUAL
   - ACCESSIBLE THROUGH CUSTOMER ACCESS ASSEMBLY DOOR ON REAR OF GENERATOR.
4. REMOVE THE REAR ENCLOSURE COVER PANEL TO ACCESS THE STUB-UP AREAS AS FOLLOWS:
   - HIGH VOLTAGE CONNECTION INCLUDING AC LOAD LEAD CONDUIT CONNECTION NEUTRAL CONNECTION, BATTERY CHARGER 120 VOLT AC (0.5 AMP MAX) CONNECTION.
   - LOW VOLTAGE CONNECTION INCLUDING TRANSFER SWITCH CONTROL WIRES.
5. CENTER OF GRAVITY AND WEIGHT MAY CHANGE DUE TO UNIT OPTIONS.
6. BOTTOM OF GENERATOR SET MUST BE ENCLOSED TO PREVENT PEST INTRUSION AND RECIRCULATION OF DISCHARGE AIR AND/OR IMPROPER COOLING AIR FLOW.
7. REFERENCE OWNERS MANUAL FOR LIFTING WARNINGS.
8. MOUNTING BOLTS OR STUDS TO MOUNTING SURFACE SHALL BE 5/8-11 GRADE 5 (USE STANDARD SAE TORQUE SPECS)
9. MUST ALLOW FREE FLOW OF INTAKE AIR, DISCHARGE AIR AND EXHAUST. SEE SPEC SHEET FOR MINIMUM AIR FLOW AND MAXIMUM RESTRICTION REQUIREMENTS.
10. GENERATOR MUST BE INSTALLED SUCH THAT FRESH COOLING AIR IS AVAILABLE AND THAT DISCHARGE AIR FROM RADIATOR IS NOT RECIRCULATED.
11. EXHAUST MUFFLER AND FAN BELT ENCLOSED WITHIN GENERATOR ENCLOSURE, REMOVE FRONT PANEL TO ACCESS.

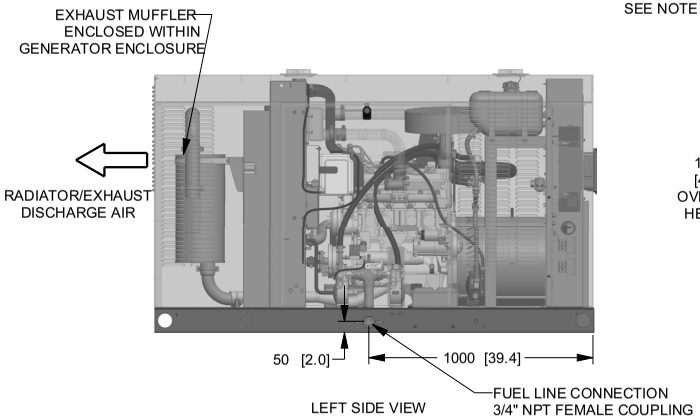

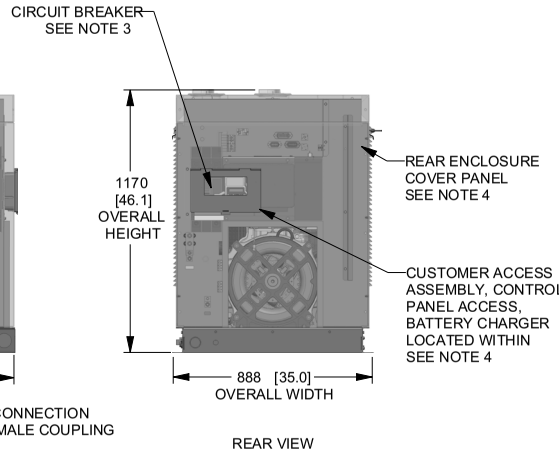

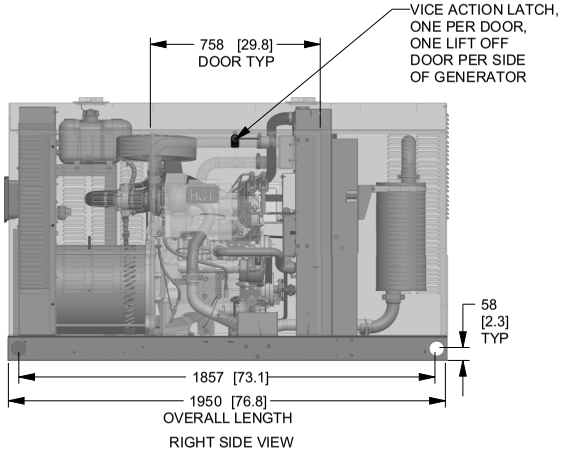

WEIGHT DATA				
ENGINE/KW	ENCLOSURE MATERIAL	WEIGHT GENSET ONLY KG [LBS]	WEIGHT SHIPPING SKID KG [LBS]	SHIPPING WEIGHT KG [LBS]
2.4L 60KW	ST	582 [1283]	44 [98]	626 [1381]
2.4L 60KW	AL	558 [1230]	44 [98]	602 [1328]

DIMENSIONS: MM [INCH]

60 kW

installation layout

Drawing #0L2090-B (2 of 2)

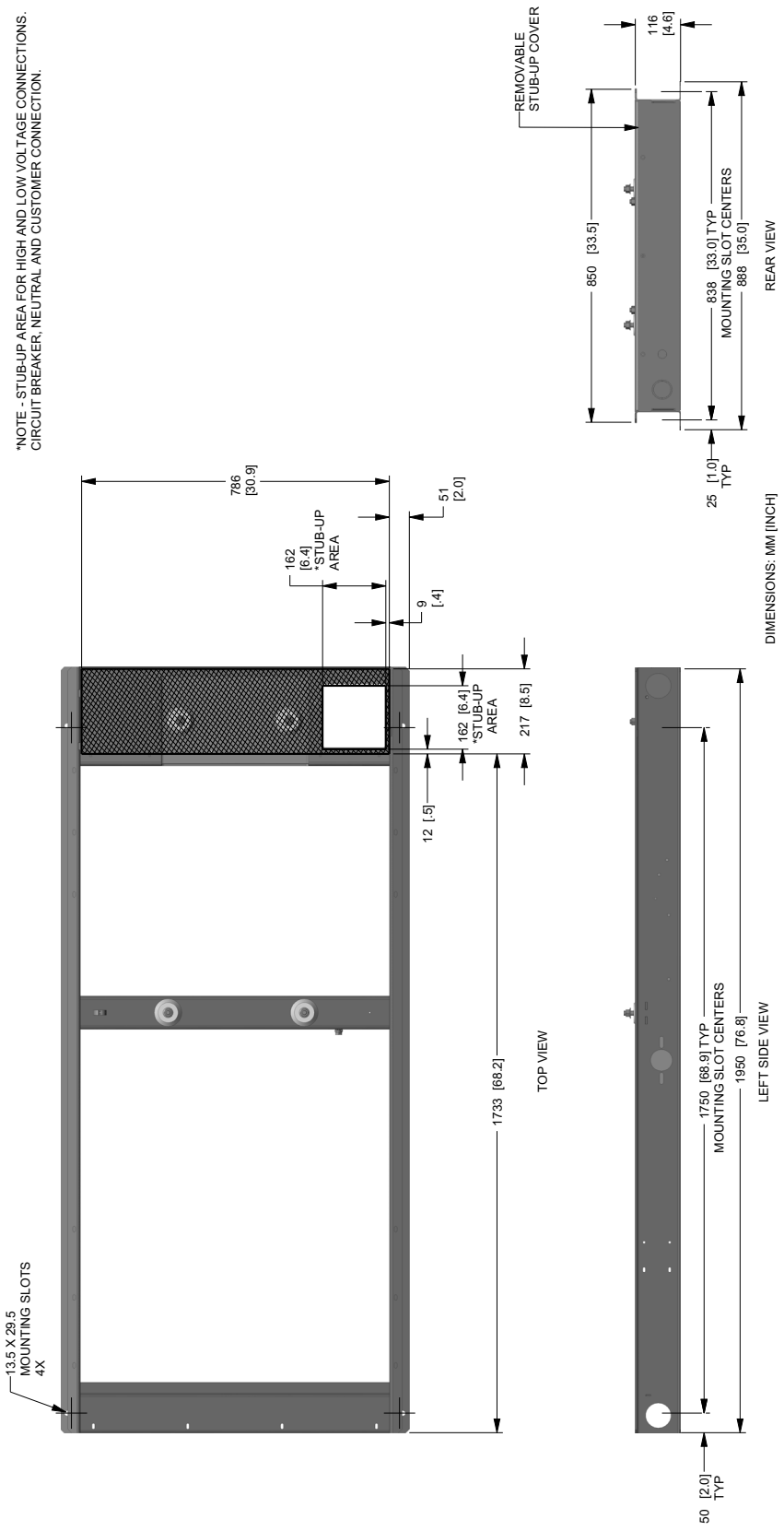

©2019 Generac Power Systems, Inc. All rights reserved. All specifications are subject to change without notice. Bulletin 0L0037SBY-M 02/01/2021